KOSHIN

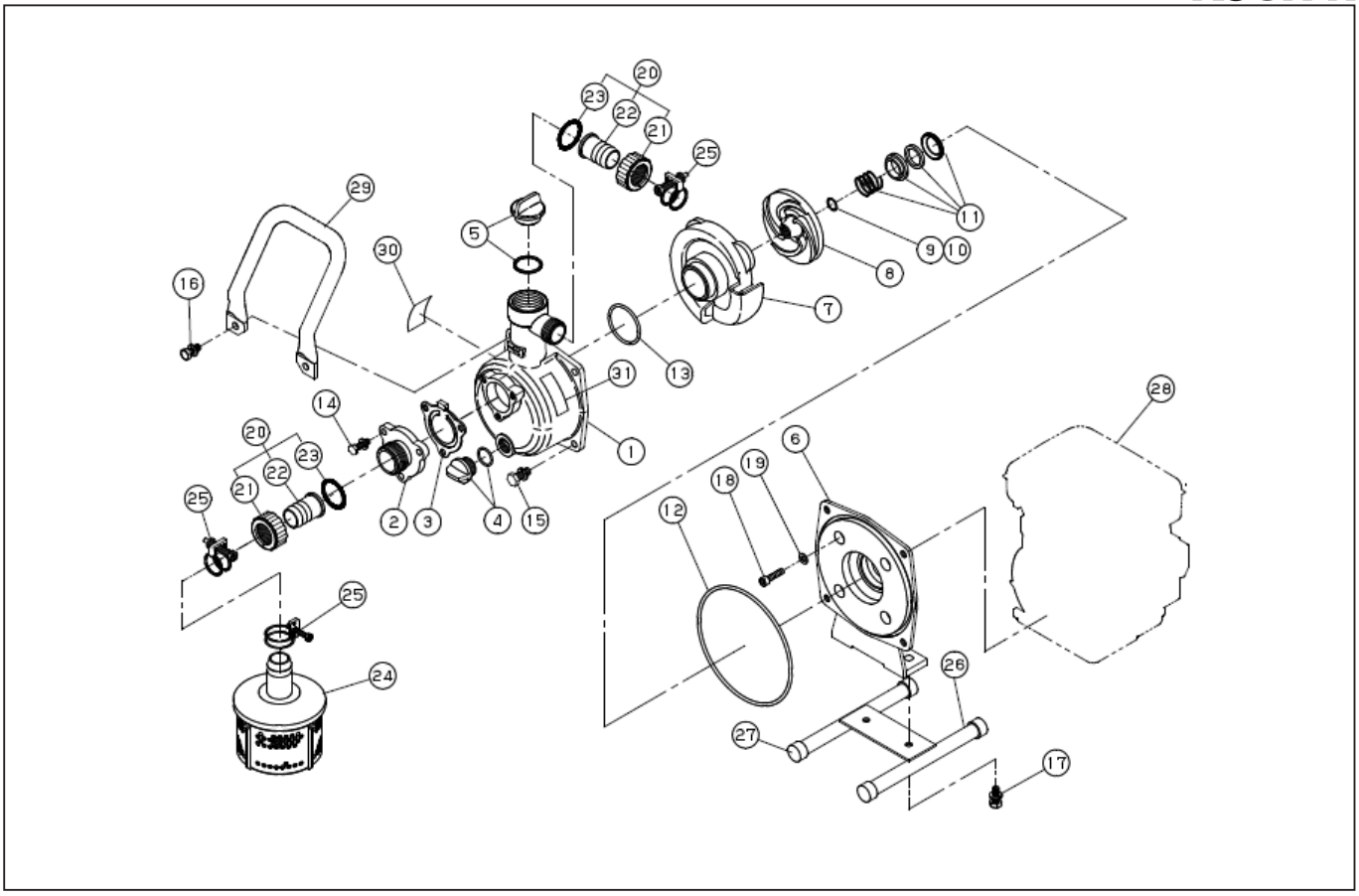

DWG No.012940508 MODELE : SEV-25L FORM : SEV-25L-BAO-0 (KC26)

No.	PARTS CODE	PARTS NAME	QTY	MATERIAL/SIZE	REMARKS
1	012A158	PUMP CASING	1	ADC	
2	012A157	SUCTION FLANGE	1	ADC	
3	0113326	CHECK VALVE	1	NBR	
4	0148010	15A PLUG SET	1		
5	0118450	32A PLUG SET	1		
6	012A159	FLANGE BRACKET	1	ADC	
7	012A156	VOLUTE CASING	1	ADC	
8	012A160	IMPELLER	1	ADC	
9	0140251	IMPELLER ADJUSTING WASHER	1	BS T=0.3	
10	0121628	IMPELLER ADJUSTING WASHER	1	BS T=0.6	
11	0121666	MECHANICAL SEAL	1	HG-12	
12	890255031	O-RING	1	1517-31 NBR	
13	889855042	O-RING	1	P42 NBR	
14	743119032	HEXAGON BOLT	3	M6 × 20 SWRM	
15	743119045	HEXAGON BOLT	2	M8 × 20 SWRM	
16	743119046	HEXAGON BOLT	2	M8 × 22 SWRM	
17	743119043	HEXAGON BOLT	2	M8 × 16 SWRM	
18	734532274	HEXAGON SOCKET BOLT	4	M5 × 40 SCM	
19	0121817	SEAL WASHER	4	φ 5	
20	0348124	COUPLING SET	2	25mm	
21	0121745	COUPLING	2	ABS GTR10 BLACK	
22	0121659	25 NIPPLE	2	ABS φ 26.5	
23	0340065	COUPLING PACKING	2	CR	
24	0118193	STRAINER	1	PP	
25	0120953	HOSE BAND	3	φ 32	(0120953)
26	0118267	BASE SET	1	BLACK	
27	0123210	PIPE RUBBER	4	NBR	
28	0121617	ENGINE	1	KC26-C4-P	
29	0114277	HANDLE	1	STKM	
30	0122935	NAME PLATE	1	ﾃﾄﾛﾝﾌｨﾙﾑ	

♦ Bare engine can not be supplied

KOSHIN

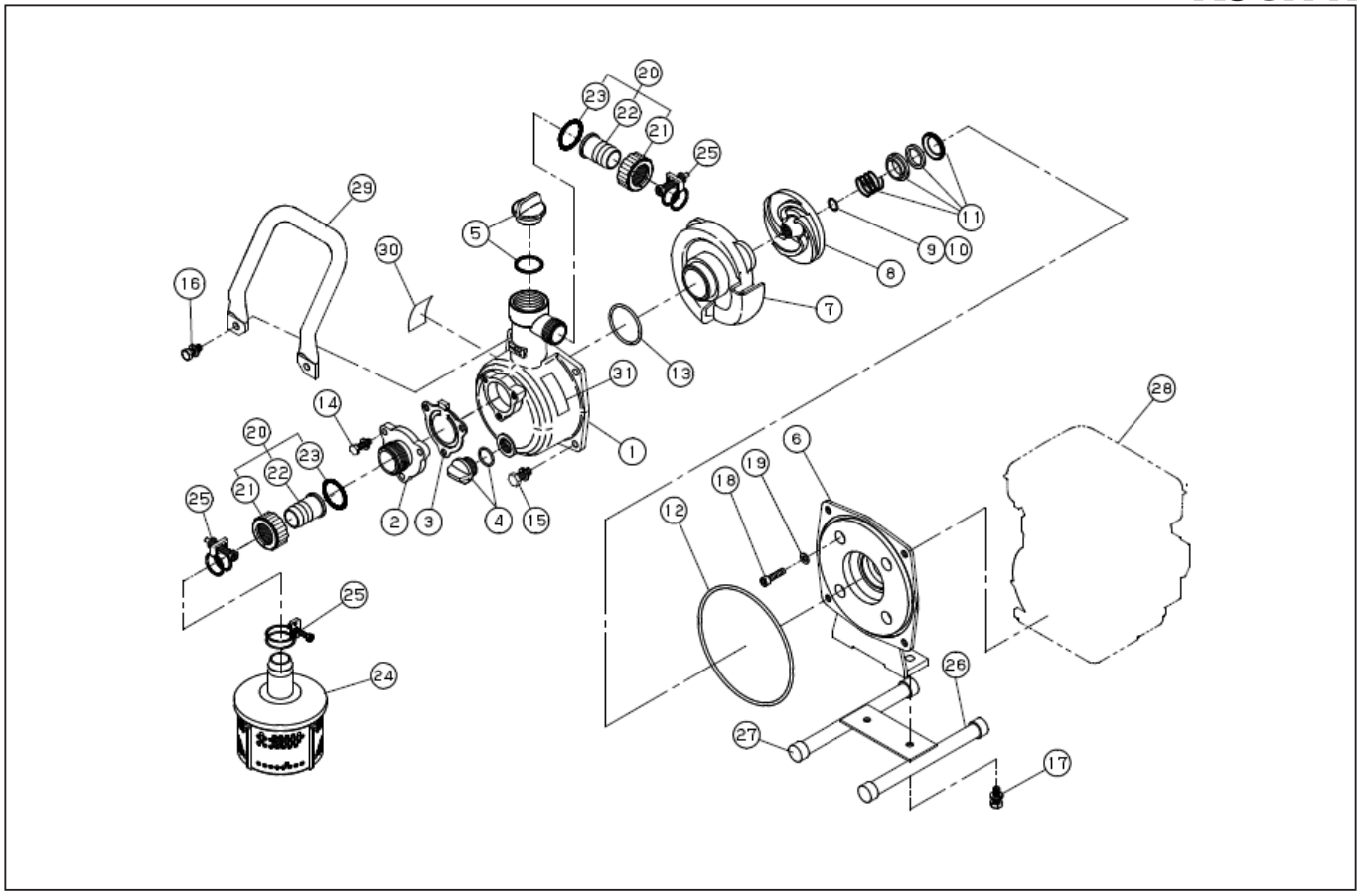

DWG No.012940508 MODELE : SEV-25L FORM : SEV-25L-BAO-0 (KC26)

No.	PARTS CODE	PARTS NAME	QTY	MATERIAL/SIZE	REMARKS
31	0122621	STICKER	1	ﾕﾎﾟ#80+PET	
	0121597	MANUAL	1		

♦ Bare engine can not be supplied