1 HEAD SUBASSEMBLY,CYLINDER/PLUG,SPARK

GV-3000-BAA

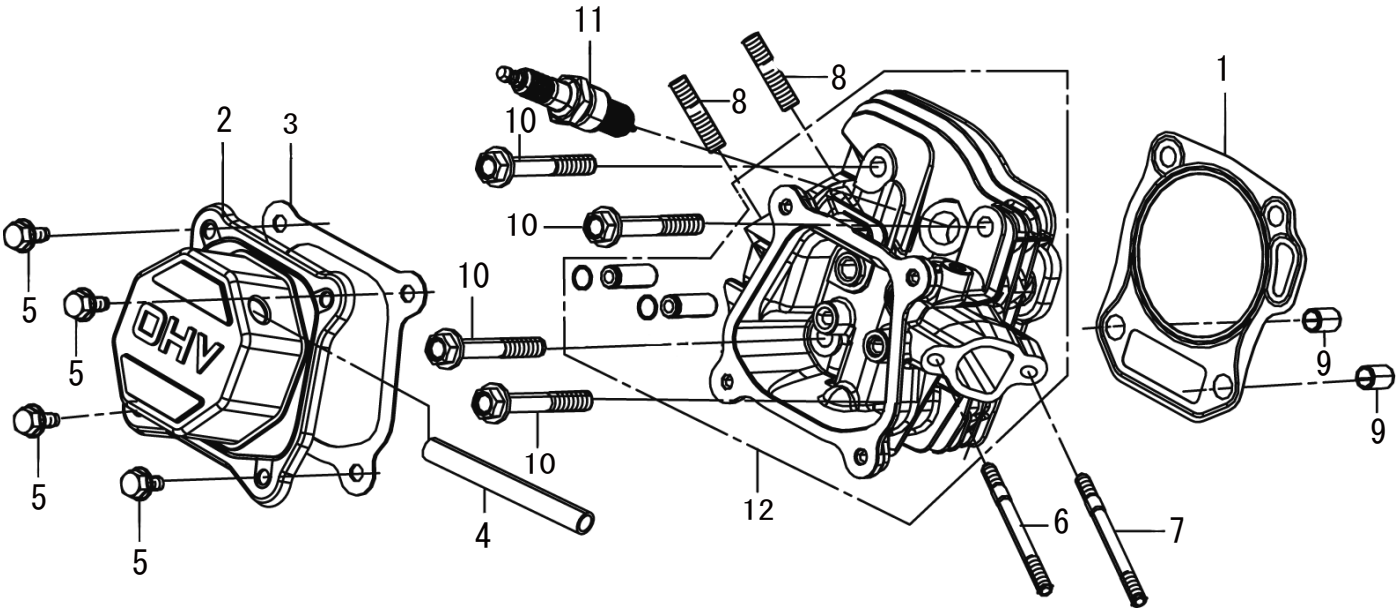

1 HEAD SUBASSEMBLY,CYLINDER/PLUG,SPARK

GV-3000-BAA

No.	PARTS CODE	PARTS NAME	QTY	MATERIAL/SIZE	REMARKS
1	100048301	GASKET,CYLINDER HEAD	1		
2	100000202	COVER SUBASSEMBLY,CYLINDER HEAD	1		
3	100039901	GASKET,CYLINDER HEAD COVER	1		
4	100048401	TUBE,BREATHER	1		
5	100000501	BOLT	4	M6X12	
6	100033001	STUD	2		
7	100000701	STUD	2	M8X34	
8	100000801	PIN	2	ϕ11X14	
9	100000901	BOLT,CYLINDER HEAD	4	M8X60	
10	100009201	PLUG,SPARK	1		
11	100020801	HEAD SUBASSEMBLY,CYLINDER	1		

2 COVER SUBASSEMBLY,CRANKCASE/CRANKCASE/GEAR ASSY,GOVERNOR GV-3000-BAA

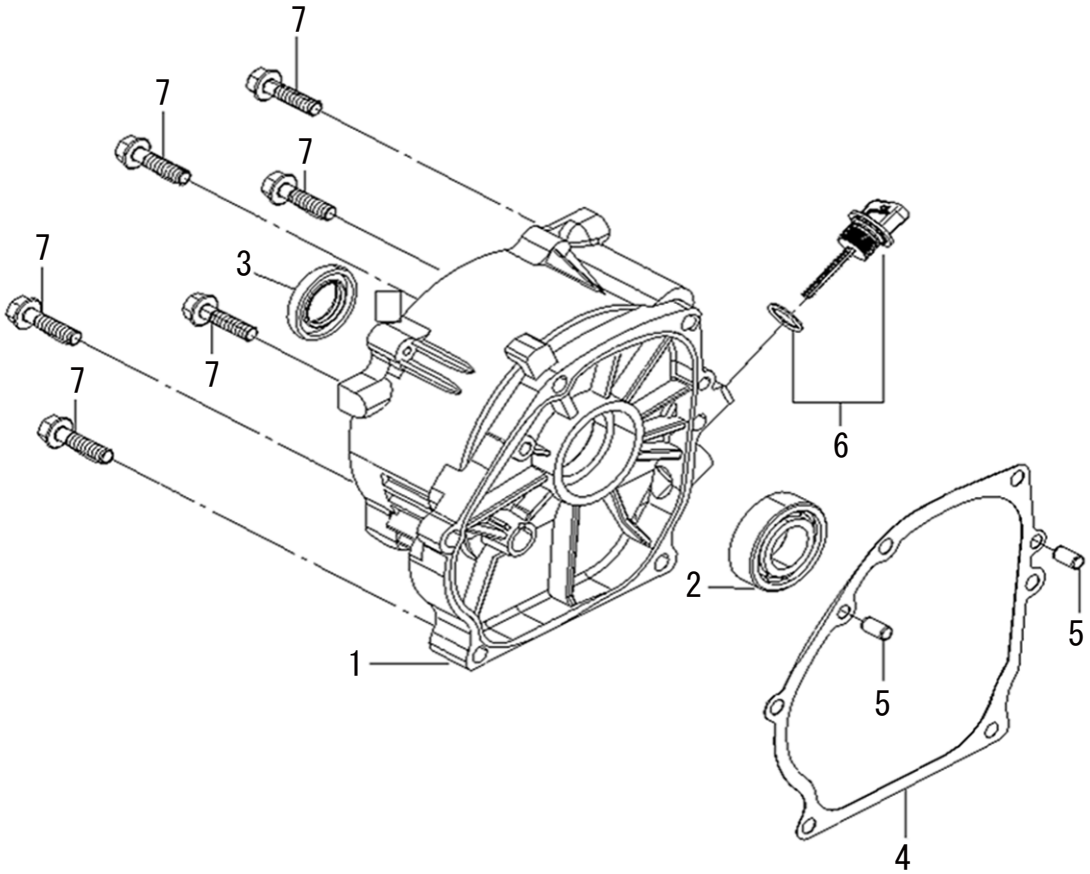

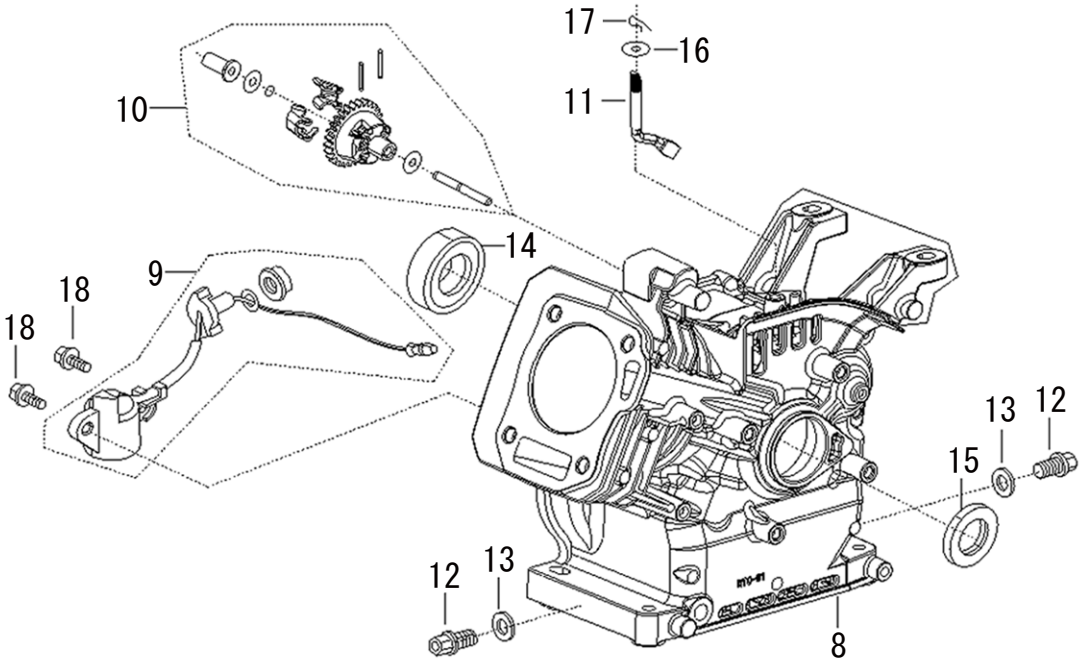

2 COVER SUBASSEMBLY,CRANKCASE/CRANKCASE/GEAR ASSY,GOVERNOR GV-3000-BAA

No.	PARTS CODE	PARTS NAME	QTY	MATERIAL/SIZE	REMARKS
1	100048801	COVER ASSY,CRANKCASE	1		
2	100040401	BEARING	1		
3	100001902	SEAL,OIL	1	ϕ25Xϕ41.25X6	
4	100002401	GASKET,CRANKCASE	1		
5	100002501	PIN	2	ϕ9X12	
6	100040501	DIPSTICK SUBASSEMBLY,OIL	1		
7	100002801	BOLT	6	M8X32	
8	100048601	CRANKCASE SUBASSEMBLY.	1		
9	100001302	SENSOR,ENGINE OIL	1		
10	100048701	GEAR ASSY,GOVERNOR	1		
11	100001501	ARM,GOVERNOR	1		
12	100001601	BOLT,DRAIN PLUG	2		
13	100001701	WASHER	2	ϕ10Xϕ15.8X1.5	
14	100040401	BEARING	1		
15	100001902	SEAL,OIL	1	ϕ25Xϕ41.25X6	
16	100002001	WASHER	3	6.2X15X0.6	
17	100002101	PIN	1		
18	100002201	BOLT	2	M6X14	

3 ROD,CRANKSHAFT CONNETING/RING SET,OIL

GV-3000-BAA

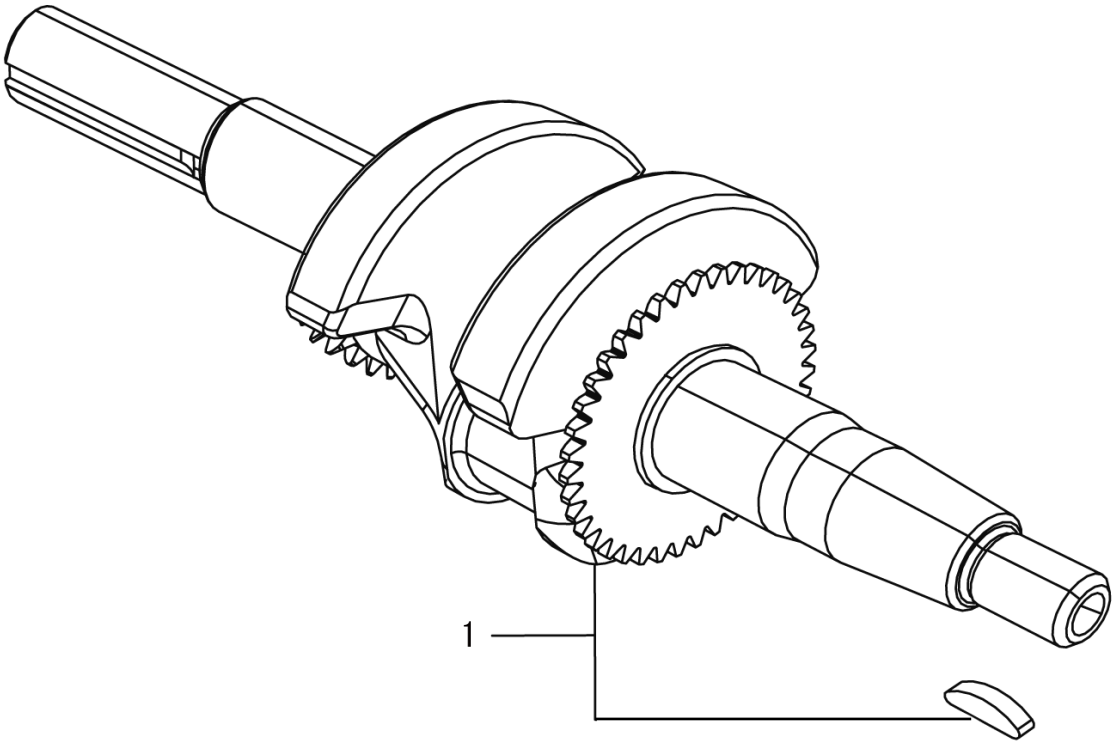

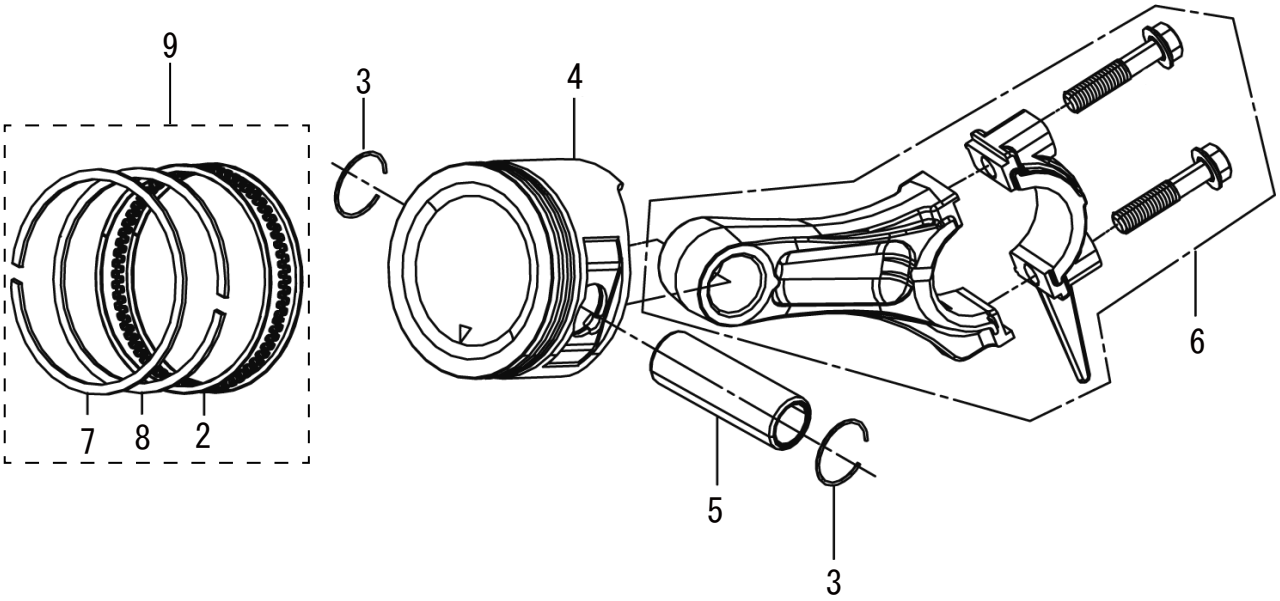

3 ROD,CRANKSHAFT CONNETING/RING SET,OIL

GV-3000-BAA

No.	PARTS CODE	PARTS NAME	QTY	MATERIAL/SIZE	REMARKS
1	100050601	CRANKSHAFT ASSY	1		
2	100076501	RING SET,OIL	1		
3	100003101	CLIP,PISTON PIN	2		
4	100076601	PISTON ASSY.	1		
5	100041001	PIN,PISTON	1		
6	100003401	ROD,CONNECTING	1		
7	100076701	RING,THE FIRST	1		
8	100076801	RING,THE SECOND	1		
9	100081401	RING ASSY,PISTON	1		

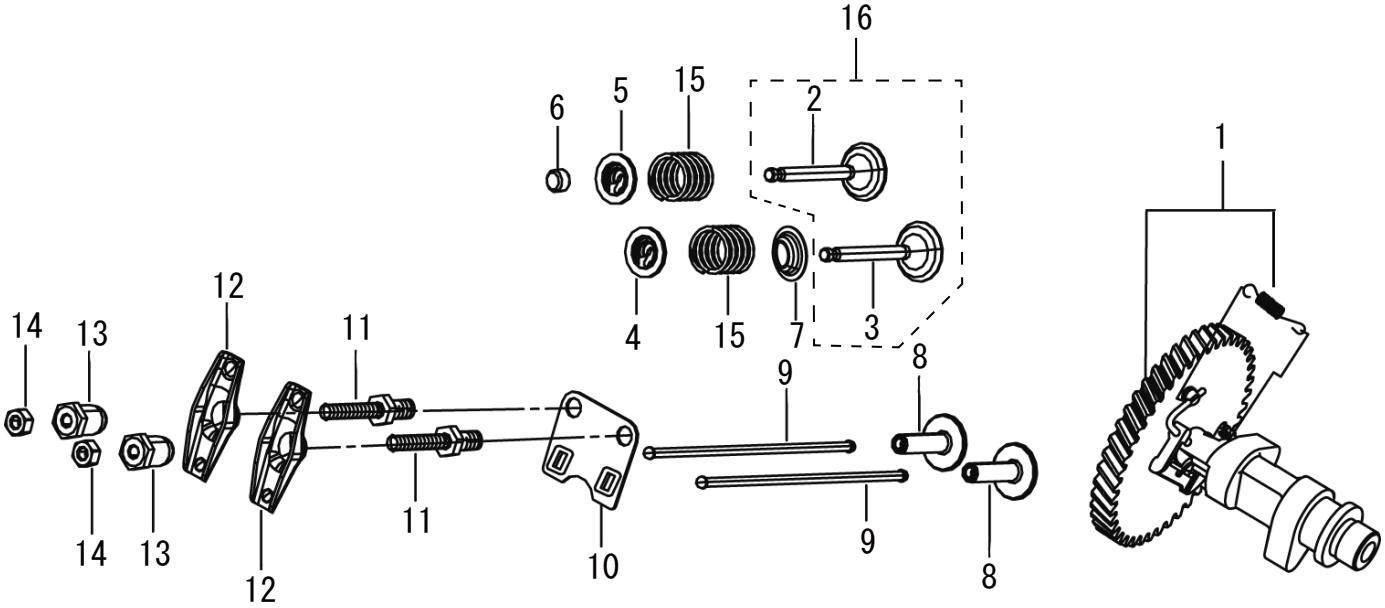
16
15
5
6
2
1
12
14
13
11
4
15
7
3
8
9
11
14
13
12
10
9
8

4 TRAIN,VALVE/CAMSHAFT SUBASSEMBLY

GV-3000-BAA

No.	PARTS CODE	PARTS NAME	QTY	MATERIAL/SIZE	REMARKS
1	100003701	CAMSHAFT ASSY.	1		
2	100049001	VALVE,EXHAUST	1		
3	100003901	VALVE,INTAKE	1		
4	100004001	SEAT,VALVE SPRING	1		
5	100004101	RETAINER,EXHAUST VALVE	1		
6	100004201	ROTATOR,VALVE	1		
7	100004301	GUIDE,SEAL	1		
8	100004401	TAPPET,VALVE	2		
9	100004501	LIFTER,VALVE	2		
10	100049101	PLATE SUBASSEMBLY,LIFTER STOPPER	1		
11	100004702	BOLT,VALVE ADJUSTING	2		
12	100004802	ROCKER,VALVE	2		
13	100004902	NUT,VALVE ADJUSTING	2		
14	100005002	NUT,VALVE LOCK	2		
15	100005101	SPRING,VALVE	2		
16	100081501	VALVE	1		

5 STARTER,RECOIL/SHIELD,LOWER

GV-3000-BAA

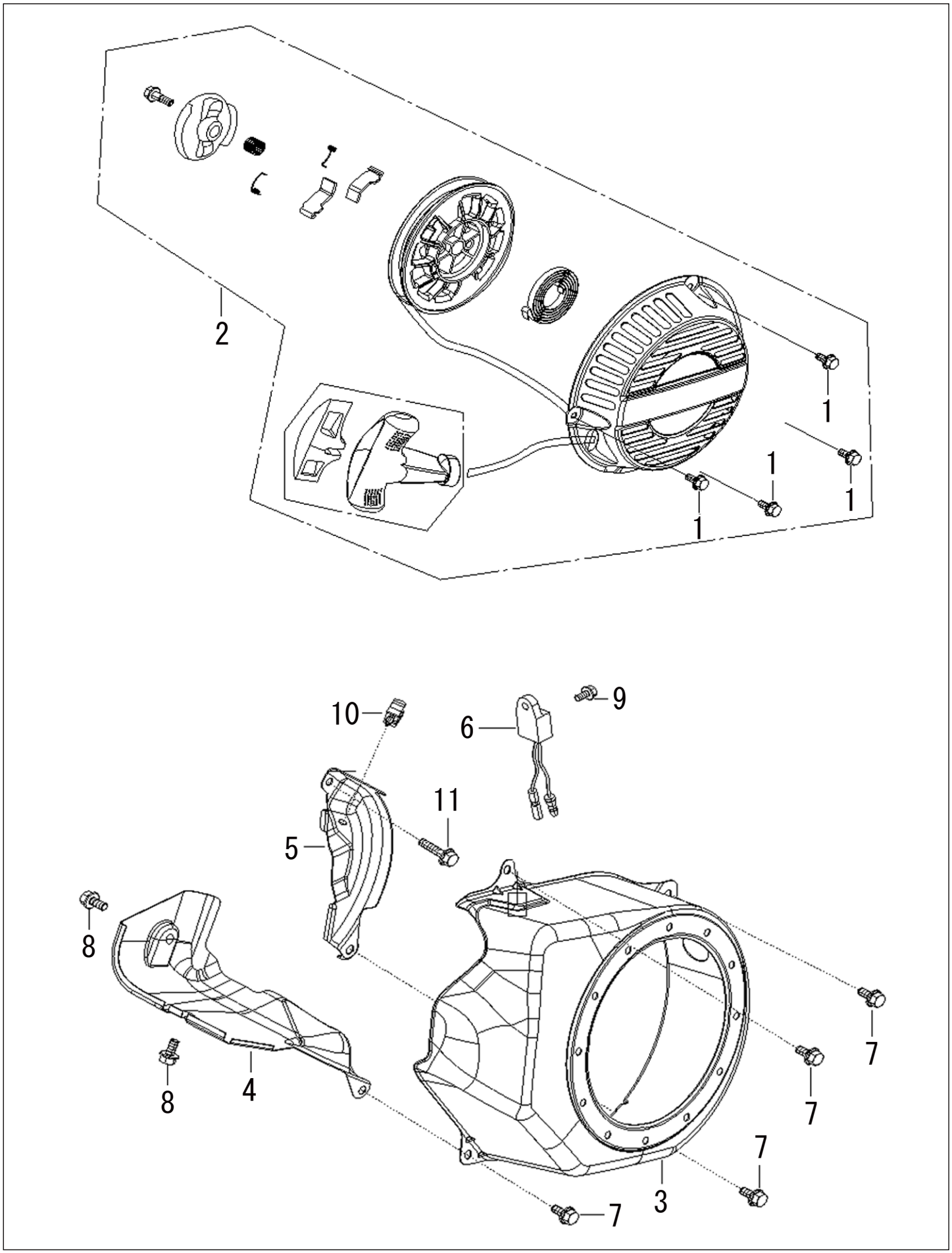

5 STARTER,RECOIL/SHIELD,LOWER

GV-3000-BAA

No.	PARTS CODE	PARTS NAME	QTY	MATERIAL/SIZE	REMARKS
1	100046301	BOLT	4	M6X8	
2	100049201	STARTER ASSY,RECOIL	1		
3	100050401	SHROUD	1		
4	100005401	SHROUD,CYLINDER BODY	1		
5	100049401	SHIELD,LOWER	1		
6	100005601	PROTECTOR,OIL	1		
7	100000501	BOLT	4	M6X12	
8	100005801	BOLT	2	M6X10	
9	100005801	BOLT	1	M6X10	
10	100006001	COLLAR	1		
11	100006101	BOLT	1	M6X16	

6 CARBURETOR ASSY./CLEANER,AIR/MUFFLER ASSY. GV-3000-BAA

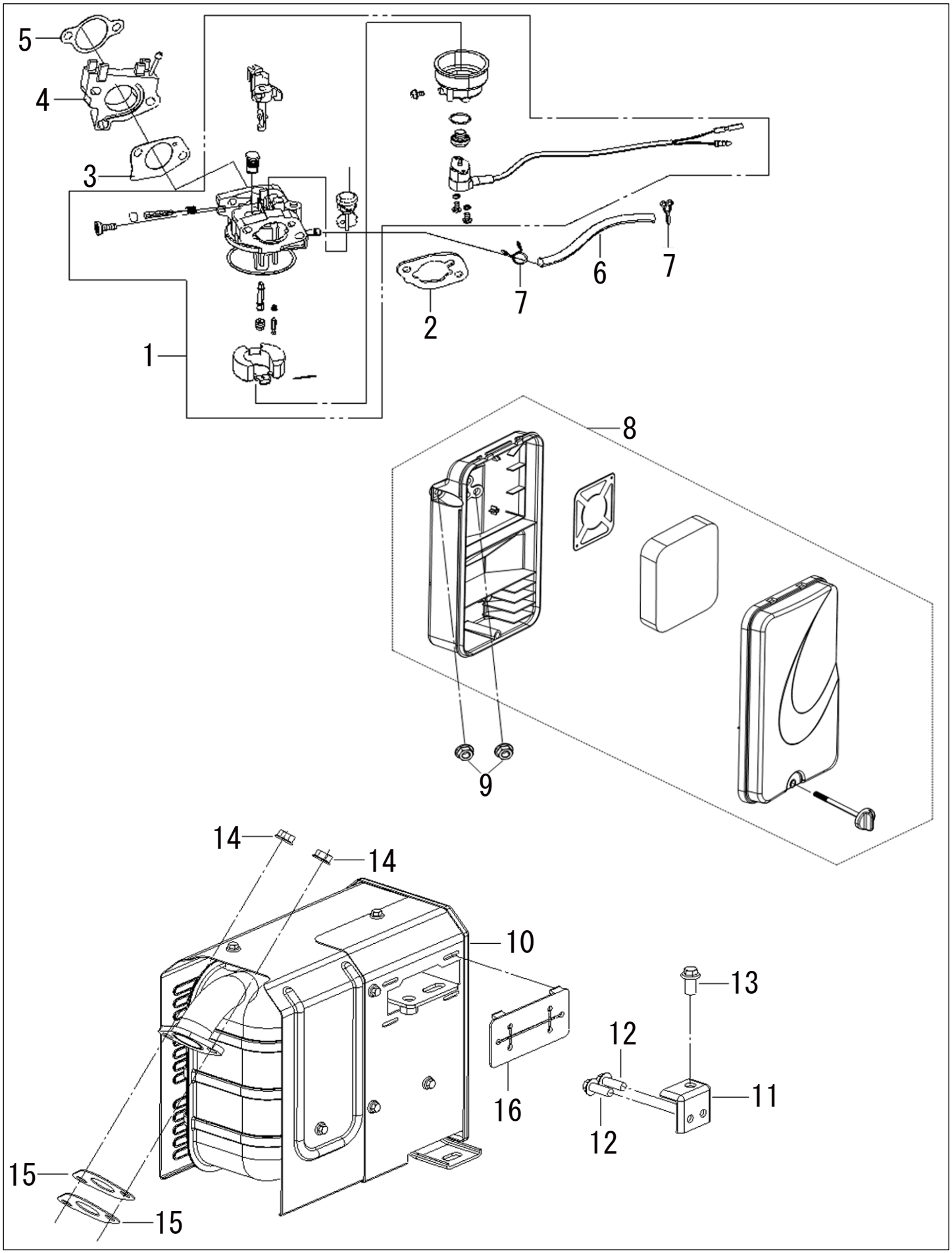

6 CARBURETOR ASSY./CLEANER,AIR/MUFFLER ASSY. GV-3000-BAA

No.	PARTS CODE	PARTS NAME	QTY	MATERIAL/SIZE	REMARKS
1	100076901	CARBURETOR ASSY.	1		
2	100049601	TUBE,FUEL	1		
3	100006401	GASKET,CARBURETOR	1		
4	100006501	PLATE,CARBURETOR INSULATOR	1		
5	100006602	GASKET,CARBURETOR INSULATOR	1		
6	100007701	COLLAR	2		
7	100077301	GASKET,AIR CLEANER	1		
8	100049701	CLEANER,AIR	1		
9	100006901	NUT	2	M6	
10	100047001	MUFFLER ASSEMBLY	1		
11	100047101	BRACKET,MUFFLER	1		
12	100006101	BOLT	2	M6X16	
13	100047201	BOLT	1		
14	100007101	NUT	2	M8	
15	100007001	GASKET,EXHAUST OUTLET	2		
16	100047301	RUBBER GASKET,MUFFLER	1		

7 TANK,FUEL/CONTROL ASSY,THROTTLE

GV-3000-BAA

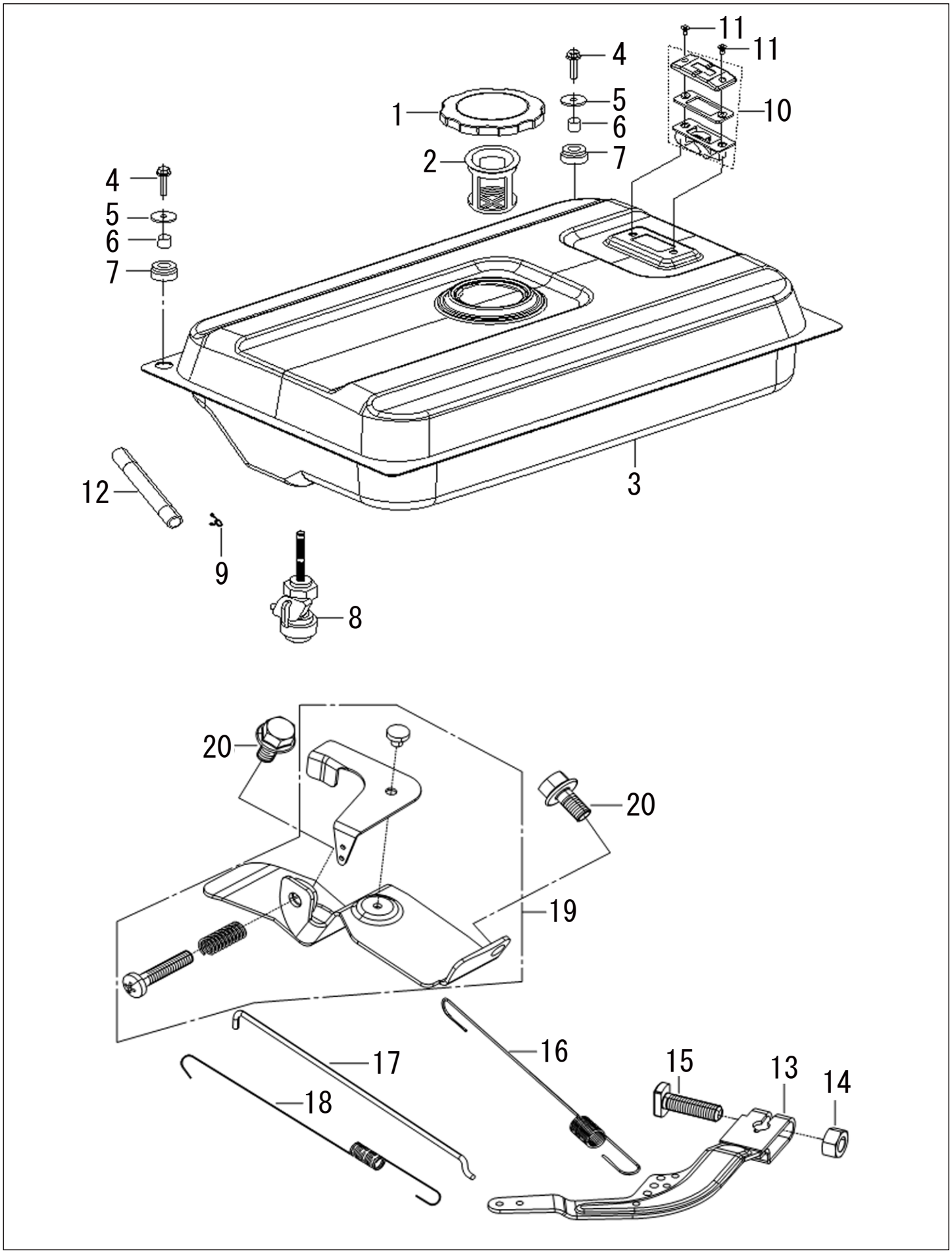

7 TANK,FUEL/CONTROL ASSY,THROTTLE

GV-3000-BAA

No.	PARTS CODE	PARTS NAME	QTY	MATERIAL/SIZE	REMARKS
1	100047402	COVER,FUEL TANK	1		
2	100047501	FUEL FILTER	1		
3	100047604	TANK,FUEL	1		
4	100042201	BOLT	2		
5	100051101	WASHER	2		
6	100047801	BUSH	2		
7	100047901	SLEEVE,FUEL TANK RUBBER	2		
8	100048001	VALVE,FUEL SHUT OFF	1		
9	100007701	CLAMP	1		
10	100048102	FUEL GAUGE	1		
11	100048201	SCREW	2		
12	100050201	RUBBER HOUSE	1		
13	100009001	SUPPORT SUBASSEMBLY,GOVERNOR	1		
14	100006901	NUT	1	M6	
15	100009101	BOLT,GOVERNOR SUPPORT	1		
16	100049901	SPRING,GOVERNOR	1		
17	100050001	ROD,GOVERNEOR	1		
18	100008901	SPRING,THROTTLE VALVE RETURNING	1		
19	100050102	CONTROL ASSY,THROTTLE	1		
20	100005801	BOLT	2	M6X10	

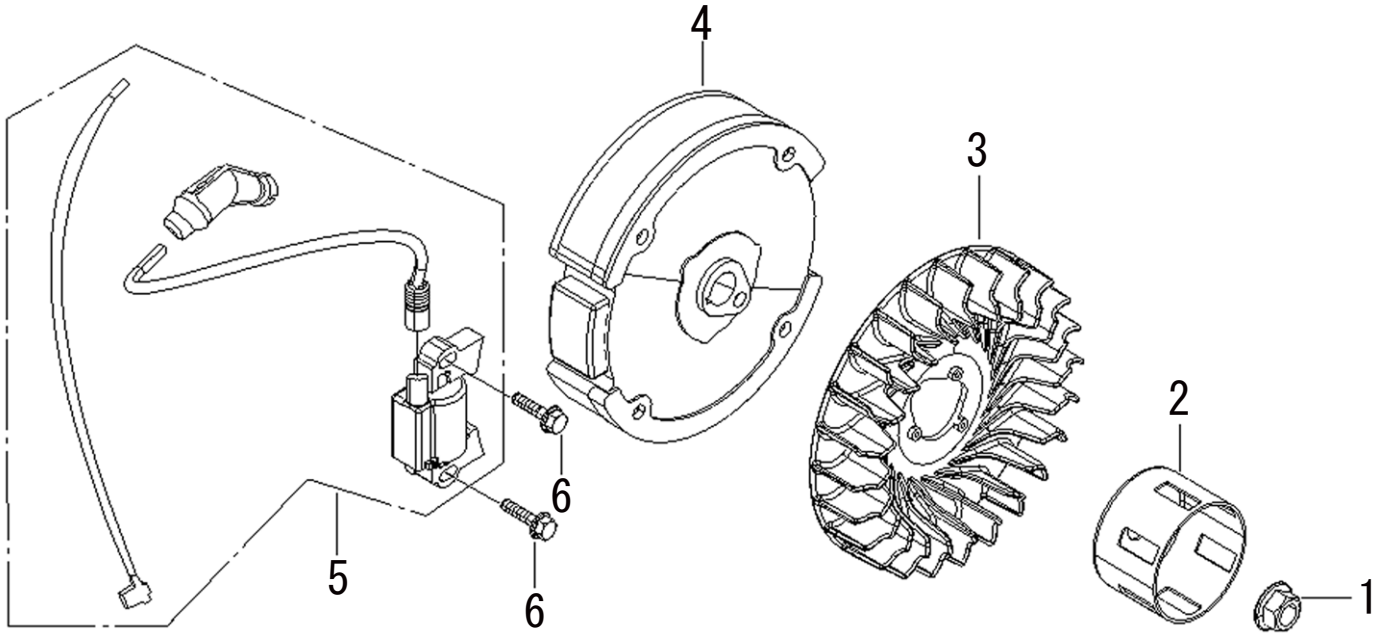
4
3
2
6
6
5
1

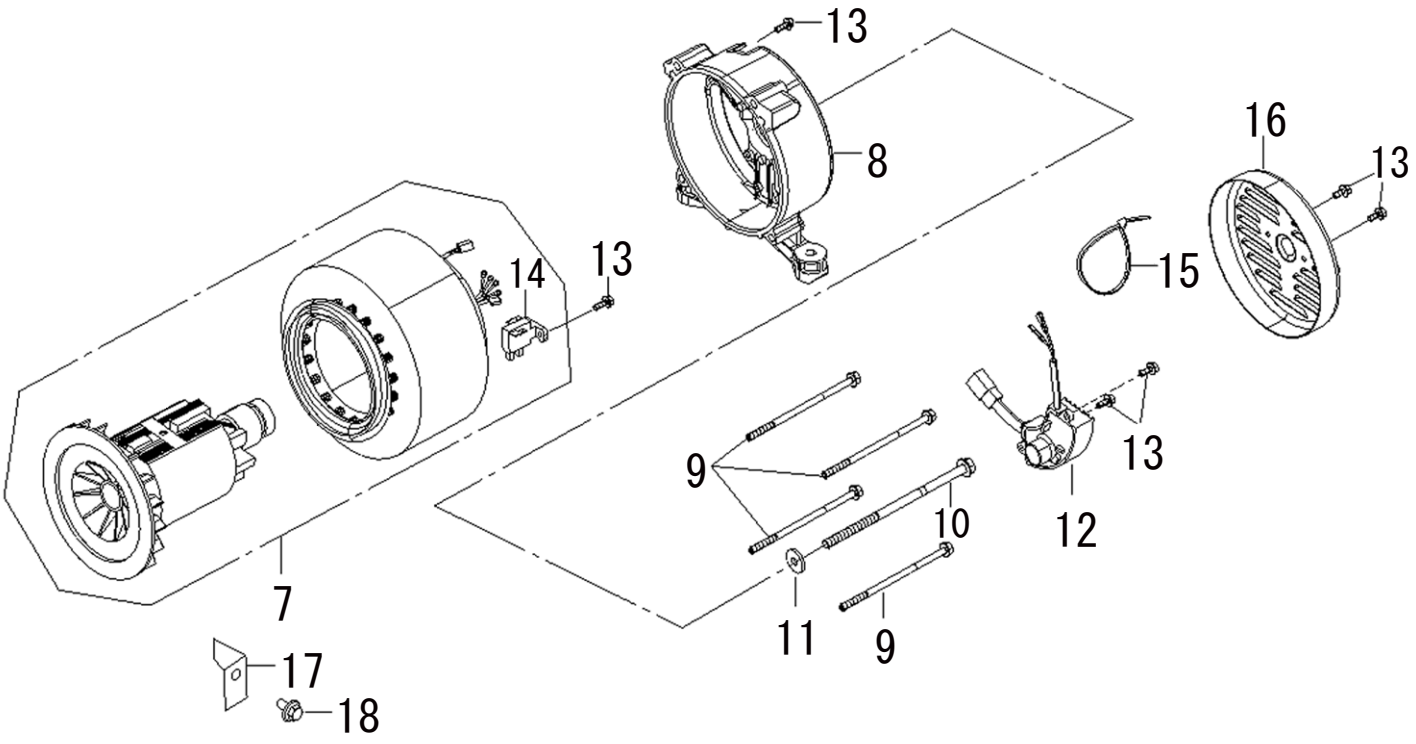
13
8
16
13
14
13
15
9
13
10
12
7
11
9
17
18

8 FLYWHEEL/ROTOR·STATOR

GV-3000-BAA

No.	PARTS CODE	PARTS NAME	QTY	MATERIAL/SIZE	REMARKS
1	100008001	NUT	1	M14X1.5	
2	100077001	PULLEY,STARTER	1		
3	100008201	IMPELLER	1		
4	100008301	FLYWHEEL SUBASSEMBLY	1		
5	100049801	COIL,IGNITION	1		
6	100008401	BOLT	2	M6X25	
7	065043001	MAGNETO	1		
8	065041601	BRACKET,MOTOR	1		
9	065041901	BOLT	4		
10	065042001	BOLT	1		
11	100076001	WASHER	1		
12	065042201	REGULATOR,VOLTAGE	1		
13	100005901	BOLT	6		
14	065043101	BRUSH SUBASSEMBLY,CARBON	1		
15	065047201	BAND	1		
16	065042401	COVER,MOTOR TAIL	1		
17	065042501	BRACKET,MOTOR COVER	1		
18	100000501	BOLT	1		

9 FRAME/PANEL SUBASSEMBLY,CONTROL/PLUG

GV-3000-BAA

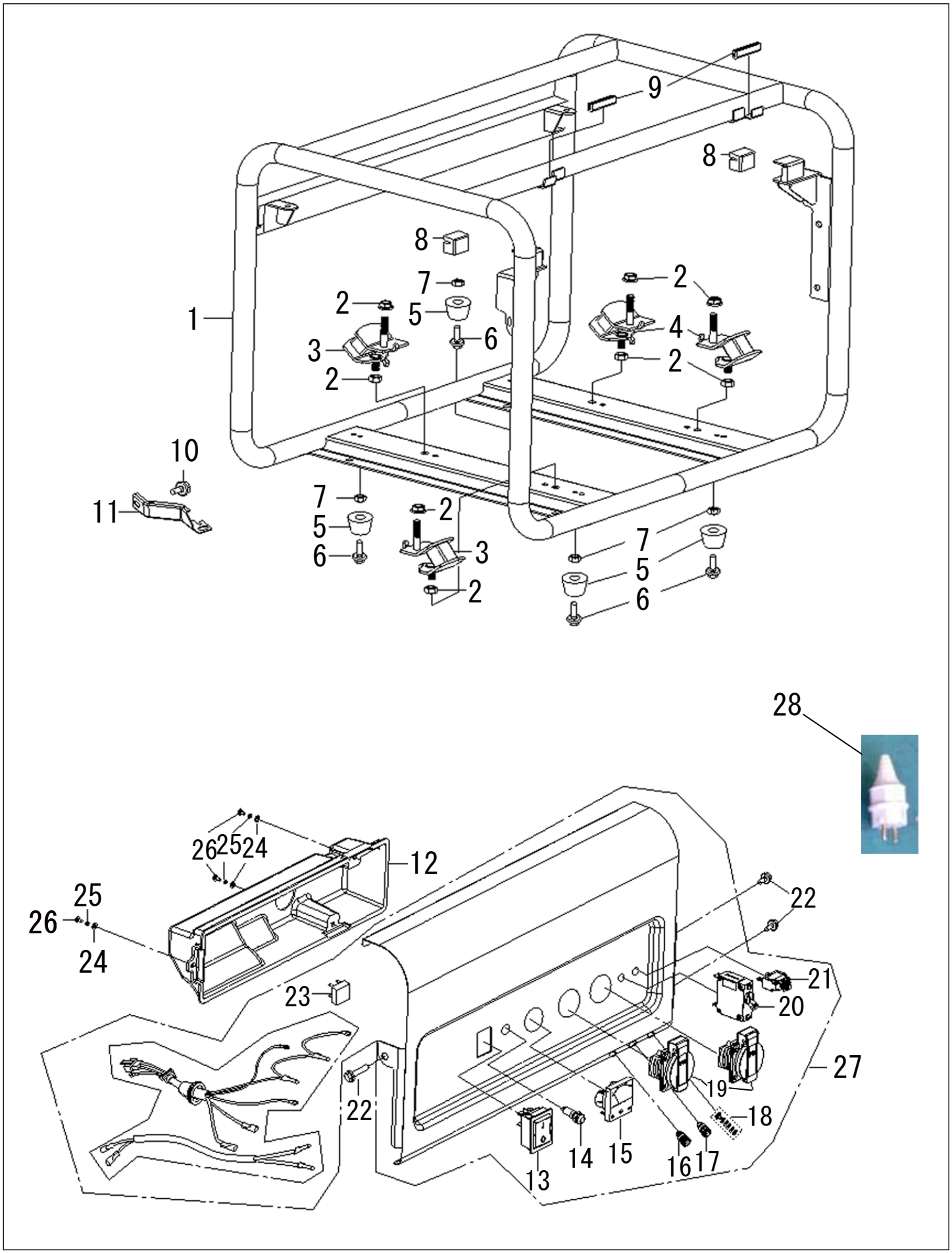

9 FLYWHEEL/ROTOR·STATOR

GV-3000-BAA

No.	PARTS CODE	PARTS NAME	QTY	MATERIAL/SIZE	REMARKS
1	065039003	FRAME ASSY,ENGINE	1		
2	065039101	SCREW	8		
3	065039202	CUSHION,ENGINE FRAME	2		
4	065039302	CUSHION,ENGINE FRAME RIGHT	2		
5	065039401	SEAT,ENGINE FRAME SHOCK	4		
6	065039501	BOLT	4		
7	065039601	NUT	4		
8	065039701	CUSHION,ENGINE FUEL TANK	2		
9	065039801	SLEEVE,RUBBER	2		
10	100000501	BOLT	1		
11	065048701	BRACKET,AIR CLEANER	1		
12	065040001	CASE,PANEL REAR	1		
13	065040101	SWITCH ASS.	1		
14	065040201	POWER LIGHT	1		
15	065040301	VOLTMETER	1		
16	065040401	POSITIVE TERMINAL	1		
17	065040501	NEGATIVE TERMINAL	1		
18	065040601	GROUNDING TERMINAL COMBINATION	1		
19	065040701	120 VOLT DUPLEX RECEPTACLE	2		
20	065040801	SINGLE-SRAGE CIRCUIT BREAKERS	1		
21	065040901	CIRCUIT BREAKER 20 AMP 1 POLE	1		
22	100000501	SCREW	3		
23	065041101	RECTIFIER BRIDGE	1		
24	065041201	WASHER	3		
25	065041301	WASHER,SPRING	3		
26	065041401	SCREW	3		
27	065041503	PANEL,CONTROL,ASSY.	1		
28	100080401	PLUG,CEE 7/4, 2pin	2		